6100
Footswitch

Footswitch for auxiliary control of industrial machines.
It acts on the machine's motor through a power interface, like a contactor.

FEATURES

- The emergency stop mushroom pushbutton complies with standard EN 418.
- Positive opening NC contacts for safety functions.
- Mechanical life of switches: 1 million operations.
- IP protection degree: footswitch 6100 is classified IP53.
- Extreme temperature resistance: -13°F to +158°F (-25°C to +70°C).
- Made of plastic material or die-cast aluminium.
- Materials and components are shock and wear resistant.

OPTIONS

- Available with standard protection cover or large cover for safety shoes.
- Single or double footswitches fixed on a metal plate, with emergency mushroom pushbutton.
- Special footswitch design for pneumatic valve with fixing plate.
- It may be fitted with "lock-release" device used for keeping the pedal pressed or with safety device to prevent accidental operation.
- Snap or slow action switches with 1NO+1NC contacts, or slow action switches with 2NO+2NC contacts.

CERTIFICATIONS

- CE marking.

The data and the products illustrated in this brochure may be modified without notice. Under no circumstances can their description have a contractual value.

CERTIFICATIONS

Conformity to Community Directives	2014/35/UE Low Voltage Directive
	2006/42/CE Machinery Directive
Conformity to CE Standards	EN 60204-1 Safety of machinery - Electrical equipment of machines
	EN 60947-1 Low-voltage switchgear and controlgear
	EN 60947-5-1 Low-voltage switchgear and controlgear - Control circuit devices and switching elements - Electromechanical control circuit devices
	EN 60529 Degrees of protection provided by enclosures
	EN 418 Safety of machinery - Emergency stop equipment, functional
Markings and homologations	CE

GENERAL TECHNICAL SPECIFICATIONS

Ambient temperature	Storage -40°F/+158°F (-40°C/+70°C)
	Operational -13°F/+158°F (-25°C/+70°C)
IP protection degree	IP 53
Insulation category	Class I
Cable entry	Cable clamp M20

TECHNICAL SPECIFICATIONS OF THE MICROSWITCHES

Code	PRSL0036XX	PRSL0045PI	PRSL0047PI
Utilisation category	AC15	AC 15	
Rated operational current	3 A	1,9 A	
Rated operational voltage	250 Vac	380 Vac	
Rated thermal current	10 A	10 A	
Rated insulation voltage	300 Vac	500 Vac	
Mechanical life	$1x10^6$ operations		
Connections	Screw-type terminal		
Wires	1x2.5 mm^2, 2x1.5 mm^2 (UL - (c)UL: use 60°C or 75°C copper (CU) conductor and wire 16-18 AWG)		
Tightening torque	0.8 Nm		
Microswitch type	Double break, snap action	Double break, slow action	Double break, slow action
Contacts	1NO+1NC (All NC contacts are of the positive opening operation type ⊖)	1NO+1NC (All NC contacts are of the positive opening operation type ⊖)	2NO+2NC (All NC contacts are of the positive opening operation type ⊖)
Scheme	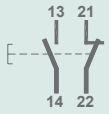	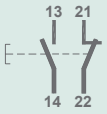	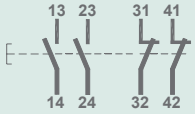
Markings and homologations	CE c UL us EAC	CE c UL us	

Springer Controls Company • 96074 Chester Road, Yulee, FL 32097 • (904) 225-0575 • Fax: (904) 225-9084 • www.springercontrols.com

OVERALL DIMENSIONS

Simple

* with standard protection
( ) with large protection

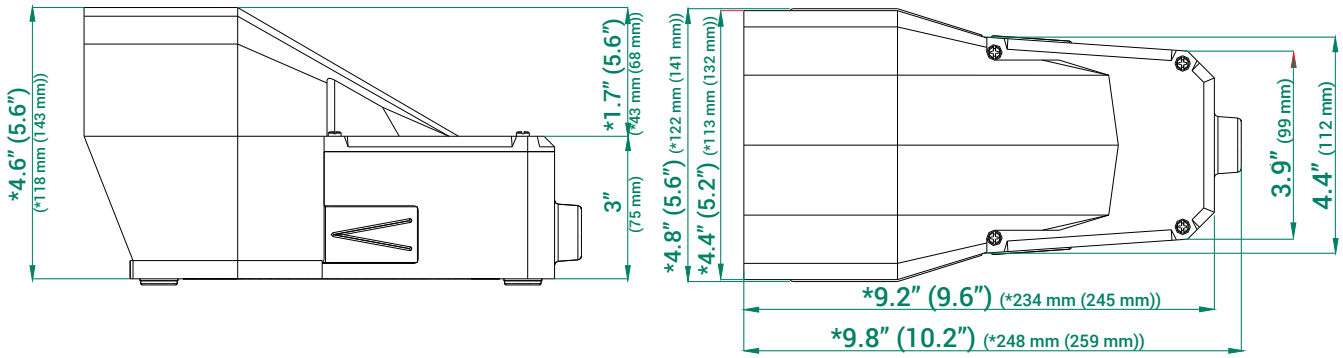

Double

* with standard protection
( ) with large protection

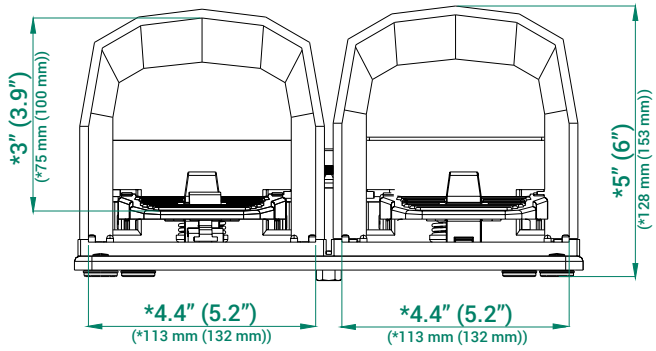

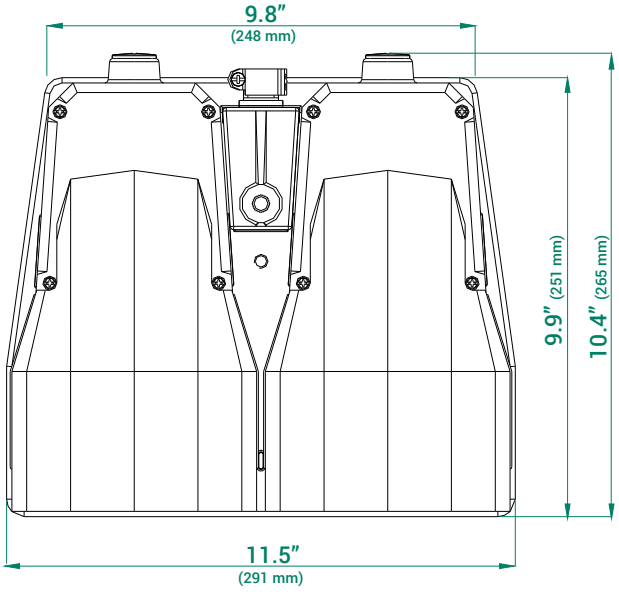

EXPLODED DRAWING

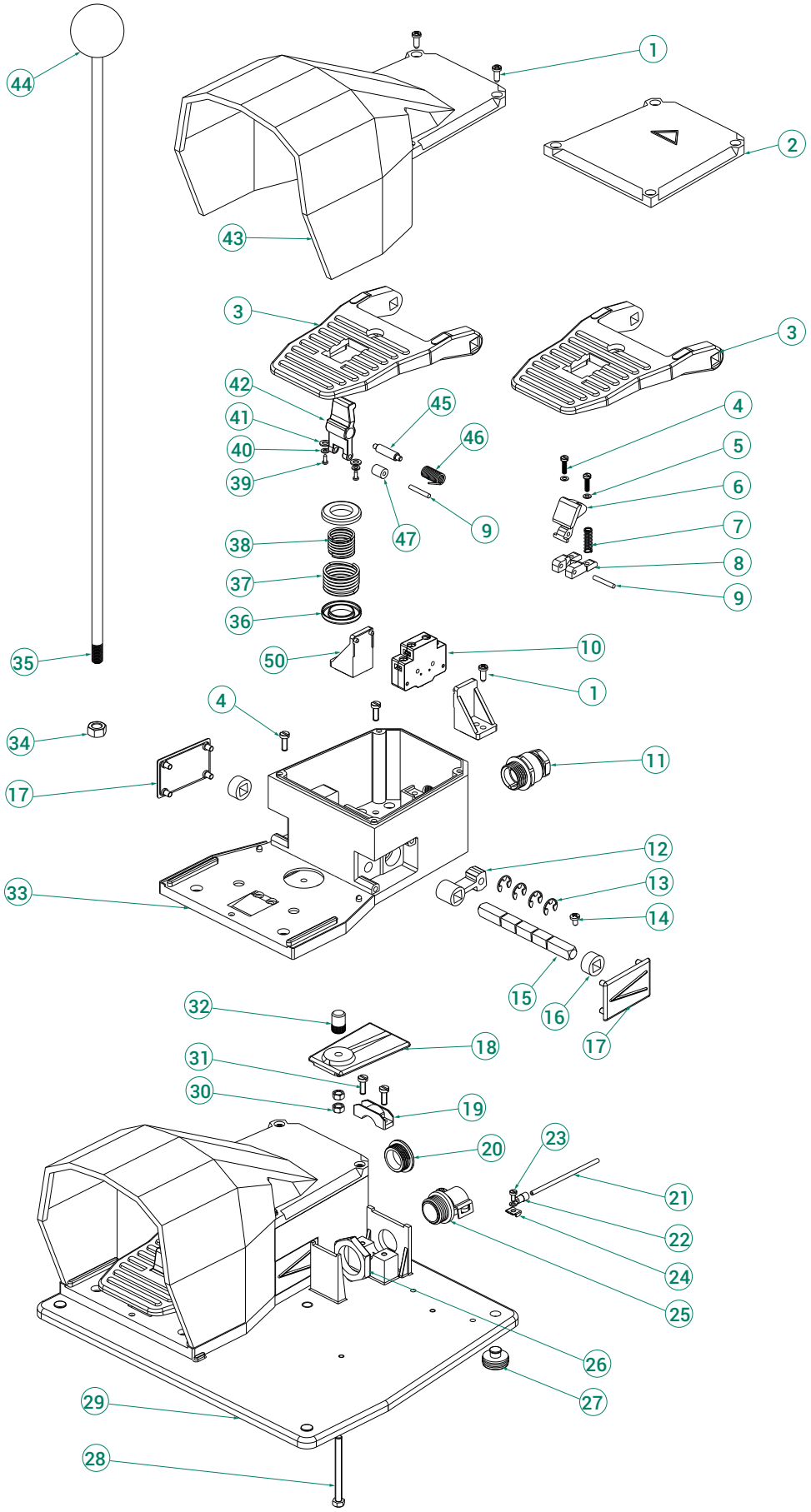

Springer Controls Company • 96074 Chester Road, Yulee, FL 32097 • (904) 225-0575 • Fax: (904) 225-9084 • **www.springercontrols.com**

STANDARD FOOTSWITCHES

Material	Footswitch type			Protection		No. of switches			Code
	Simple	Double	For valves	Standard	Large	PRSL0036XX 1NO+1NC snap action 	PRSL0045PI 1NO+1NC slow action 	PRSL0047PI 2NO+2NC slow action 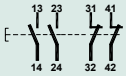	
Plastic	X				X	1			PF04612100
	X				X	2			PF04612200
	X				X	3			PF04612300
	X				X		1		PF04612500
	X				X			1	PF04612600
	X				X		1	1	PF04612700
	X				X			2	PF04612800
		X			X	2			PF04613100
		X			X	4			PF04613200
		X			X		2		PF04613300
		X			X			2	PF04613400
		X			X			4	PF04613500
	X		X	X					PF04814100
	X		X		X				PF04814600
Aluminium	X			X		1			PF04615100
	X			X		2			PF04615200
	X			X		3			PF04615300
	X			X			1		PF04615500
	X			X				1	PF04615600
	X			X			1	1	PF04615700
	X			X				2	PF04615800
		X		X		2			PF04616100
		X		X		4			PF04616200
		X		X			2		PF04616300
		X		X				2	PF04616400
		X		X				4	PF04616500
	X				X	1			PF04617100
	X				X	2			PF04617200
	X				X	3			PF04617300
	X				X		1		PF04617500
	X				X			1	PF04617600
	X				X		1	1	PF04617700
	X				X			2	PF04617800
		X			X	2			PF04618100
		X			X	4			PF04618200
		X			X		2		PF04618300
		X			X			2	PF04618400
		X			X			4	PF04618500

ASSEMBLY DRAWING

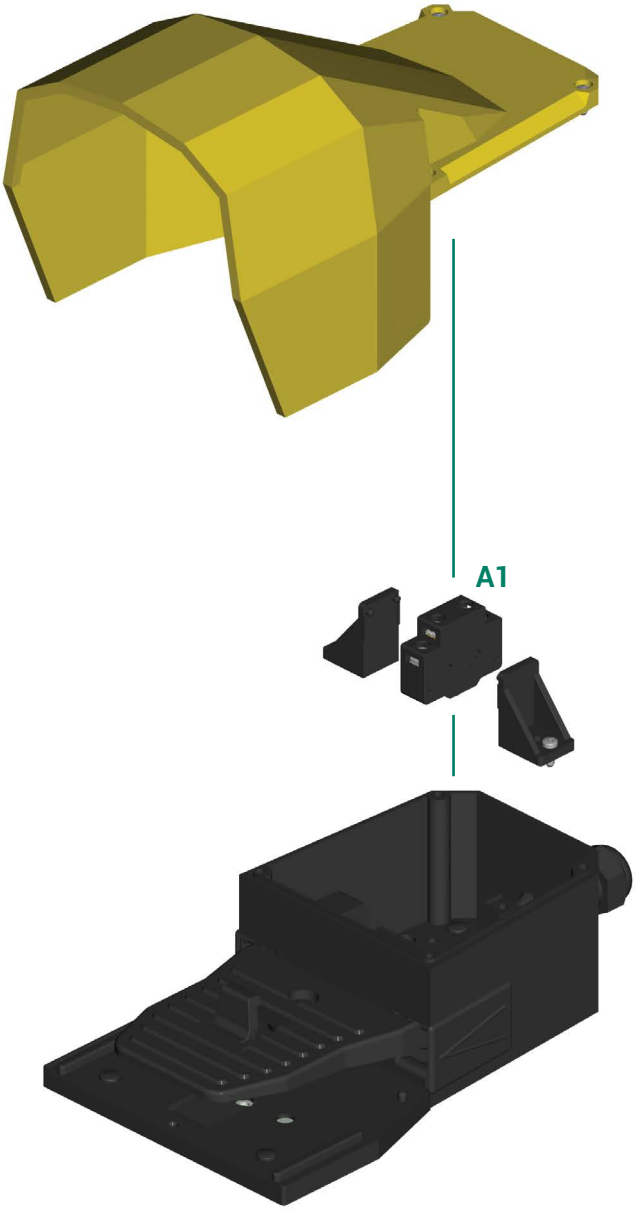

COMPONENTS

Switches

Ref.	Drawing	Description	Scheme	Code
		1NO+1NC snap action switch	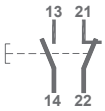	PRSL0036XX
A1		1NO+1NC slow action switch	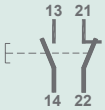	PRSL0045PI
		2NO+2NC slow action switch	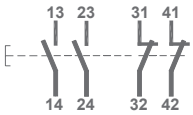	PRSL0047PI

Springer Controls Company • 96074 Chester Road, Yulee, FL 32097 • (904) 225-0575 • Fax: (904) 225-9084 • **www.springercontrols.com**

6100 - REQUEST FORM FOR NON STANDARD FOOTSWITCH

Footswitch type

☐ Simple

☐ Double

Protection

☐ Standard aluminium

☐ Large aluminium

☐ Large plastic

Switches

☐ 1NO+1NC snap action

☐ 1NO+1NC slow action

☐ 2NO+2NC slow action

Pedal

☐ With safety device

☐ Without safety device

☐ With lock-release device

Instructions

- Tick the box corresponding to the footswitch type required.
- Tick the boxes corresponding to the type of protection required.
- Write the number and type of switches required (max 3 snap action switches and max 2 slow action switches). It is not possible to assemble snap and slow action switches on the same footswitch.
- Tick the box corresponding to the type of pedal required.

USE AND MAINTENANCE INSTRUCTIONS

The footswitch 6100 is an electromechanical device for low voltage control circuits (EN 60947-1, EN 60947-5-1) for use as electric equipment on machines (EN 60204-1) in compliance with the essential requisites of the Low Voltage Directive 2014/35/UE and the Machine Directive 2006/42/CE.

The footswitch 6100 is designed for use in industrial environments with even very severe climatic conditions (working temperatures from -13°F to +158°F (-25°C to +70°C) and is suitable for use in tropical environments). The equipment is not suitable for use in environments with a potentially explosive atmosphere, in the presence of corrosive agents or high percentage of sodium chloride (saline mist). Contact with oil, acids and solvents may damage the equipment; avoid using them for cleaning.

Instructions for wiring

- Unscrew the screws closing the cover (1)*, lift the cover (43), partly unscrew the lock-ring on the wire clamp (11) so as to insert the wire.
- Insert the electric wire (from the outside towards the inside of the compartment) and proceed to wire the switches (10).

IMPORTANT! DO NOT DISMANTLE THE SWITCHES: THEY CAN BE WIRED WITHOUT REMOVING THEM FROM THEIR HOUSING. REMOVING THEM COULD CAUSE MALFUNCTION OF THE FOOTSWITCH.

- Loosen the terminals on the switches (10) by loosening the screws so they can be wired.
- Tighten the terminal screws with a torque of 0.8 Nm; insertability of wires into the terminals 1x2.5 mm^2 - 2x1.5mm^2 (UL - (c)UL: use 60 or 75°C conductor and wire size No. 16-18 AWG, stranded or solid).
- To close the footswitch tighten the wire clamp by turning the lockring (11), close the footswitch with its guard (43) and tighten the screws (1).

Instructions for use and maintenance

- The footswitch does not require any particular maintenance: a few simple, rapid controls will maintain the device in perfect working order for many years.
- Check and tighten the screws closing the cover (43), make sure the wire clamp (11) is securely fastened and the sheathing on the wire protects it completely.
- Remove any chips, stones, rags, etc. and remove any obstacles preventing use of the pedal (3).
- Check periodically that the safety device (42) is intact and working: to test it, try pressing the pedal (3) from the edge (it should not work).
- Check that the cover (43) is intact.
- To clean the device use compressed air (1 Atm) and a damp cloth: do not use detergents, and/or additives.
- If you notice any malfunctions, replace the footswitch.
- Do not grease and/or oil the internal organs for any reason: any parts that rub together have lifetime self-lubrication.

Any change to parts of the footswitch will invalidate the rating plate data and identification of the device, and render the warranty null and void. In case of replacement of any part, use only original replacements.

Springer Controls Company and/or TER are not liable for damages caused by improper use of the device and installation which is not made correctly.

* Please refer to the exploded drawing in the catalog.

Welcome to the Springer Controls Company. Product Guide to the TER 6100 Footswitch. This section reflects our continuing commitment to our customers to provide complete, up-to-date product information and technical data. We appreciate your choosing Springer Controls and we will continue to update this information as well as provide new products to meet today's demands for electrical control products.

Control Stations

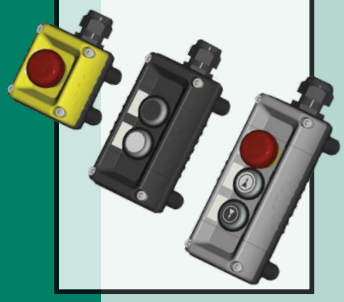

Power Switching Devices

Rotary Gear Limit Switches

Pendant Control Station

www.springercontrols.com

Visit our site, it includes new product information, complete product data with downloads, installation instructions, along with other Springer Control news.

SPRINGER
controls company

96074 Chester Road --- Yulee, Florida, 32097
Phone: (904) 225-0575 --- Fax: (904) 225-9084

6200
Footswitch

Footswitch for auxiliary control of industrial machines.
It acts on the machine's motor through a power interface, like a contactor.

FEATURES

- The emergency stop mushroom pushbutton complies with standard EN 418.
- Positive opening NC contacts for safety functions.
- Mechanical life of switches: 1 million operations.
- IP protection degree: footswitch 6200 is classified IP53.
- Extreme temperature resistance: -13°F to +158°F (-25°C to +70°C).
- Made of plastic material.
- Materials and components are shock and wear resistant.

OPTIONS

- Single or double footswitches fixed on a metal plate, with emergency mushroom pushbutton.
- It may be fitted with "lock-release" device used for keeping the pedal pressed or with safety device to prevent accidental operation.
- Snap or slow action switches with 1NO+1NC contacts, or slow action switches with 2NO+2NC contacts.

CERTIFICATIONS

- CE marking.

Fill in the request form for accurate product configuration.

The data and the products illustrated in this brochure may be modified without notice. Under no circumstances can their description have a contractual value.

CERTIFICATIONS

Conformity to Community Directives	2014/35/UE Low Voltage Directive
	2006/42/CE Machinery Directive
Conformity to CE Standards	EN 60204-1 Safety of machinery - Electrical equipment of machines
	EN 60947-1 Low-voltage switchgear and controlgear
	EN 60947-5-1 Low-voltage switchgear and controlgear - Control circuit devices and switching elements - Electromechanical control circuit devices
	EN 60529 Degrees of protection provided by enclosures
	EN 418 Safety of machinery - Emergency stop equipment, functional
Markings and homologations	CE

GENERAL TECHNICAL SPECIFICATIONS

Ambient temperature	Storage -40°F/+158°F (-40°C/+70°C)
	Operational -13°F/+158°F (-25°C/+70°C)
IP protection degree	IP 53
Insulation category	Class I
Cable entry	Cable clamp M20

TECHNICAL SPECIFICATIONS OF THE MICROSWITCHES

Code	PRSL0036XX	PRSL0045PI	PRSL0047PI
Utilisation category	AC15	AC 15	
Rated operational current	3 A	1.9 A	
Rated operational voltage	250 Vac	380 Vac	
Rated thermal current	10 A	10 A	
Rated insulation voltage	300 Vac	500 Vac	
Mechanical life	$1x10^6$ operations		
Connections	Screw-type terminal		
Wires	1x2.5 mm^2, 2x1.5 mm^2 (UL - (c)UL: use 60°C or 75°C copper (CU) conductor and wire 16-18 AWG)		
Tightening torque	0.8 Nm		
Microswitch type	Double break, snap action	Double break, slow action	Double break, slow action
Contacts	1NO+1NC (All NC contacts are of the positive opening operation type ⊖)	1NO+1NC (All NC contacts are of the positive opening operation type ⊖)	2NO+2NC (All NC contacts are of the positive opening operation type ⊖)
Scheme	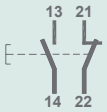	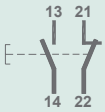	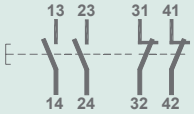
Markings and homologations	CE c UL us EAC	CE c UL us	

Springer Controls Company • 96074 Chester Road, Yulee, FL 32097 • (904) 225-0575 • Fax: (904) 225-9084 • www.springercontrols.com

OVERALL DIMENSIONS

Simple

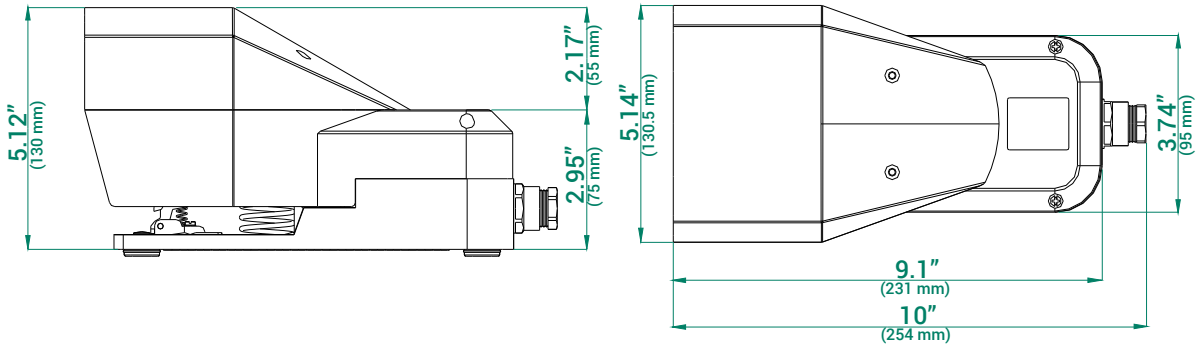

Double

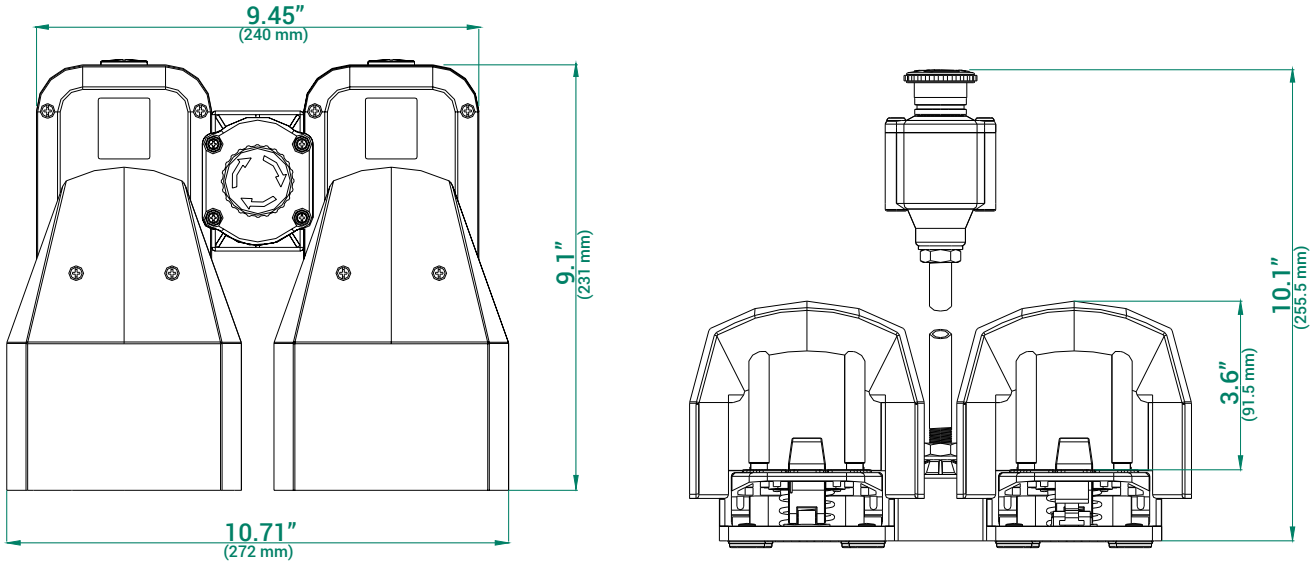

EXPLODED DRAWING

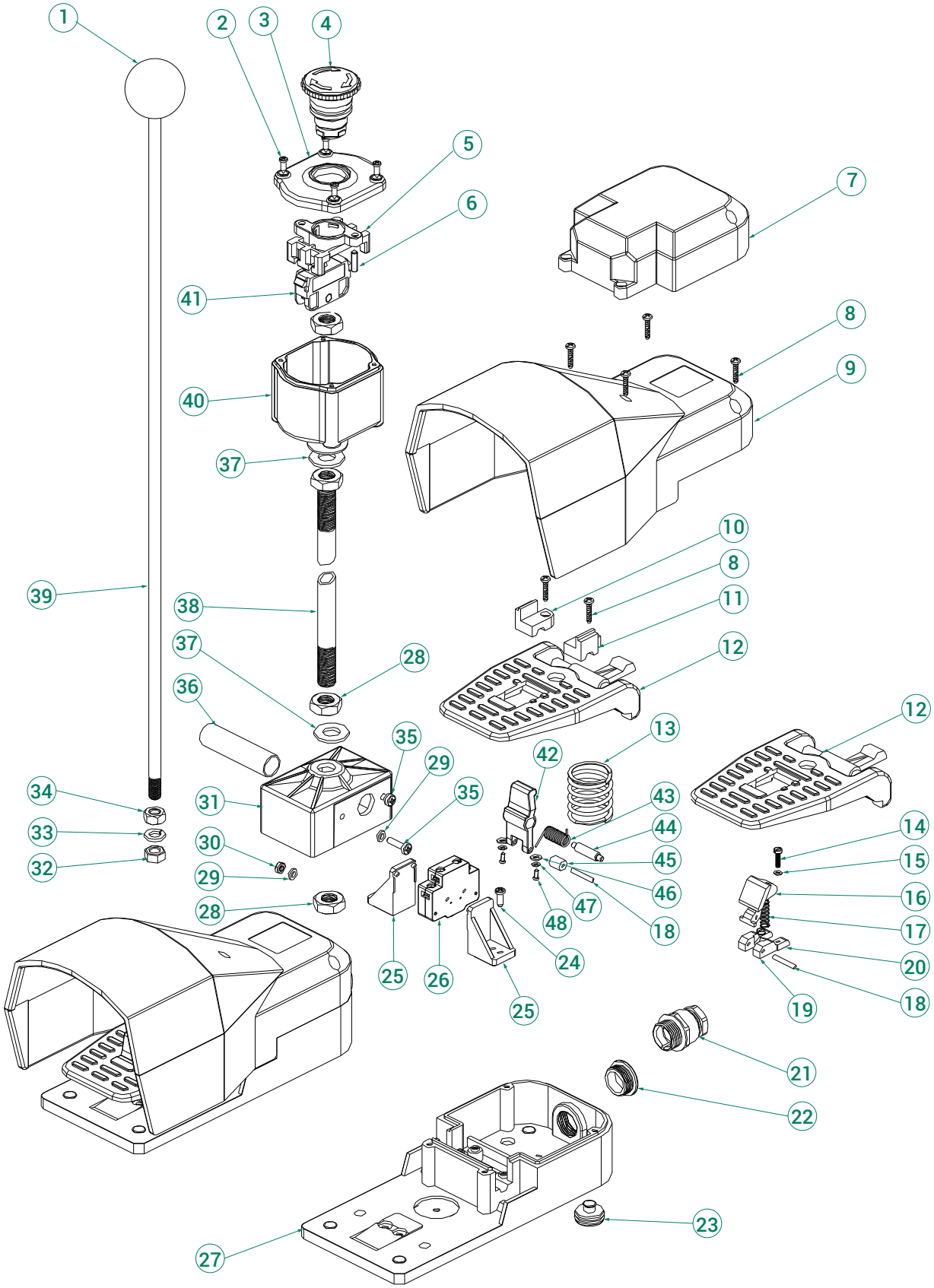

Springer Controls Company • 96074 Chester Road, Yulee, FL 32097 • (904) 225-0575 • Fax: (904) 225-9084 • **www.springercontrols.com**

STANDARD FOOTSWITCHES

Footswitch type		No. of switches			
Simple	Double	PRSL0036XX 1NO+1NC snap action 	PRSL0045PI 1NO+1NC slow action 	PRSL0047PI 2NO+2NC slow action 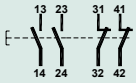	Code
X		1			PF18620010
X		2			PF18620025
X			1		PF18620037
X				1	PF18620050
	X	2			PF18620053
	X	4			PF18620054
	X		2		PF18620055
	X			2	PF18620056

NOTES

ASSEMBLY DRAWING

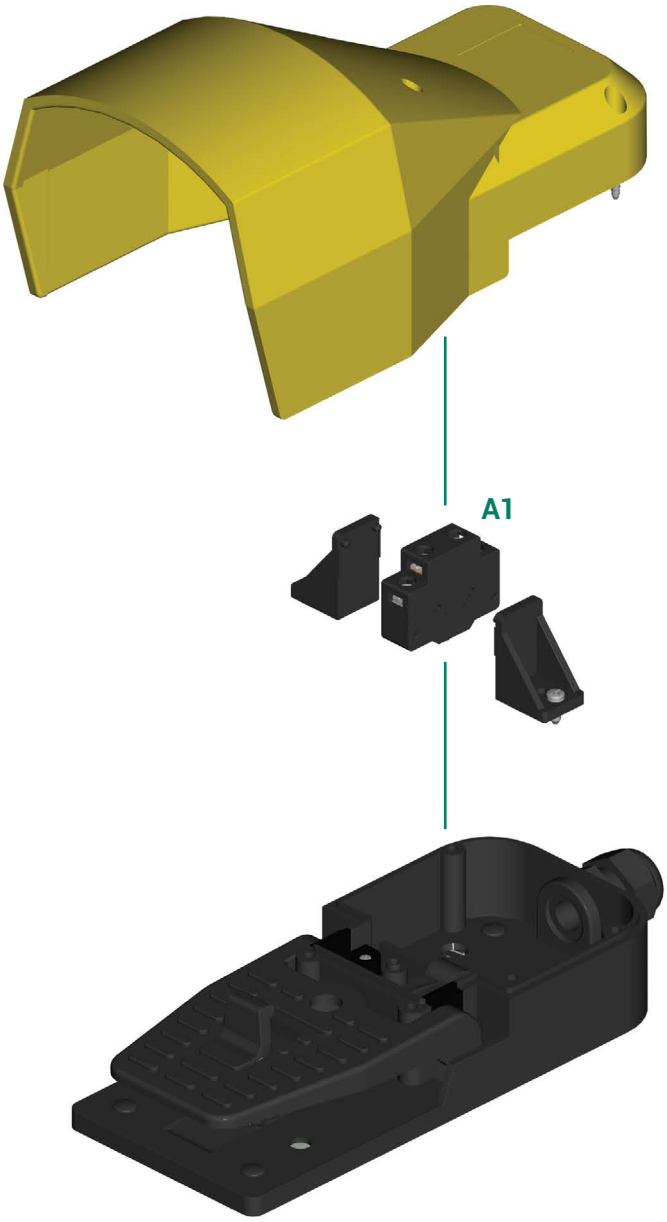

COMPONENTS

Switches

Ref.	Drawing	Description	Scheme	Code
		1NO+1NC snap action switch	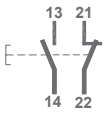	PRSL0036XX
A1		1NO+1NC slow action switch	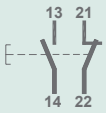	PRSL0045PI
		2NO+2NC slow action switch	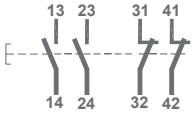	PRSL0047PI

Springer Controls Company • 96074 Chester Road, Yulee, FL 32097 • (904) 225-0575 • Fax: (904) 225-9084 • **www.springercontrols.com**

6200 - REQUEST FORM FOR NON STANDARD FOOTSWITCH

Footswitch type

☐ Simple

☐ Double

Switches

☐ 1NO+1NC snap action

☐ 1NO+1NC slow action

☐ 2NO+2NC slow action

Pedal

☐ With safety device

☐ Without safety device

☐ With lock-release device

Instructions

- Tick the box corresponding to the footswitch type required.
- Write the number and type of switches required (max 2 snap action switches and max 1 slow action switch). It is not possible to assemble snap and slow action switches on the same footswitch.
- Check the box corresponding to the type of pedal required.

USE AND MAINTENANCE INSTRUCTIONS

The footswitch 6200 is an electromechanical device for low voltage command/control and maneuvers (EN 60947-1, EN 60947-5-1) for use as electric equipment on machines (EN 60204-1) in compliance with the essential requisites of the Low Voltage Directive 2014/35/UE and the Machine Directive 2006/42/CE.

The footswitch is designed for use in industrial environments with even very severe climatic conditions (working temperatures from -13°F to +158°F (-25°C to +70°C) and is suitable for use in tropical environments). The equipment is not suitable for use in environments with a potentially explosive atmosphere, in the presence of corrosive agents or high percentage of sodium chloride (saline mist). Contact with oil, acids and solvents may damage the equipment; avoid using them for cleaning.

Instructions for wiring

- Unscrew the screws closing the cover (8)*, lift the cover (9), partly unscrew the lock ring on the wire clamp (21) so as to insert the wire.
- Insert the electric wire (from the outside towards the inside of the compartment) and proceed to wire the switches (27).

IMPORTANT! DO NOT DISMANTLE THE SWITCHES: THEY CAN BE WIRED WITHOUT REMOVING THEM FROM THEIR HOUSING. REMOVING THEM COULD CAUSE MALFUNCTION OF THE FOOTSWITCH.

- Loosen the terminals on the switches (27) by loosening the screws so they can be wired.
- Tighten the terminal screws with a torque of 0.8 Nm; insertability of wires into the terminals 1x2.5 mm^2 - 2x1.5mm^2 (UL - (c)UL: use 60 or 75°C conductor and wire size No. 16-18 AWG, stranded or solid).
- To close the footswitch tighten the wire clamp by turning the lockring (21), close the footswitch with its guard (9) and tighten the screws (8).

Instructions for use and maintenance

- The footswitch does not require any particular maintenance: a few simple, rapid controls will maintain the device in perfect working order for many years.
- Check and tighten the screws (8) closing the cover (9), make sure the wire clamp (21) is securely fastened and the sheathing on the wire protects it completely.
- Remove any chips, stones, rags, etc. and remove any obstacles preventing use of the pedal (12).
- Check periodically that the safety device (42) is intact and working: to test it, try pressing the pedal (12) from the edge (it should not work).
- Check that the cover (9) is intact.
- To clean the device use compressed air (1 Atm) and a damp cloth: do not use detergents, and/or additives.
- If you notice any malfunctions, replace the footswitch.
- Do not grease and/or oil the internal organs for any reason: any parts that rub together have lifetime self-lubrication.

Any change to parts of the footswitch will invalidate the rating plate data and identification of the device, and render the warranty null and void. In case of replacement of any part, use only original replacements.

Springer Controls Company and/or TER are not liable for damages caused by improper use of the device and installation which is not made correctly.

* Please refer to the exploded drawing in the catalogue.

Welcome to the Springer Controls Company. Product Guide to the TER 6200 Footswitch. This section reflects our continuing commitment to our customers to provide complete, up-to-date product information and technical data. We appreciate your choosing Springer Controls and we will continue to update this information as well as provide new products to meet today's demands for electrical control products.

Control Stations

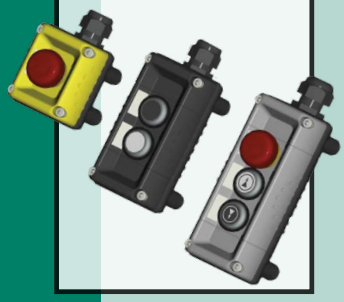

Power Switching Devices

Rotary Gear Limit Switches

Pendant Control Station

www.springercontrols.com

Visit our site, it includes new product information, complete product data with downloads, installation instructions, along with other Springer Control news.

SPRINGER
controls company

96074 Chester Road --- Yulee, Florida, 32097
Phone: (904) 225-0575 --- Fax: (904) 225-9084